DO NOT MEASURE DRAWING . IF IN DOUBT PLEASE ASK.

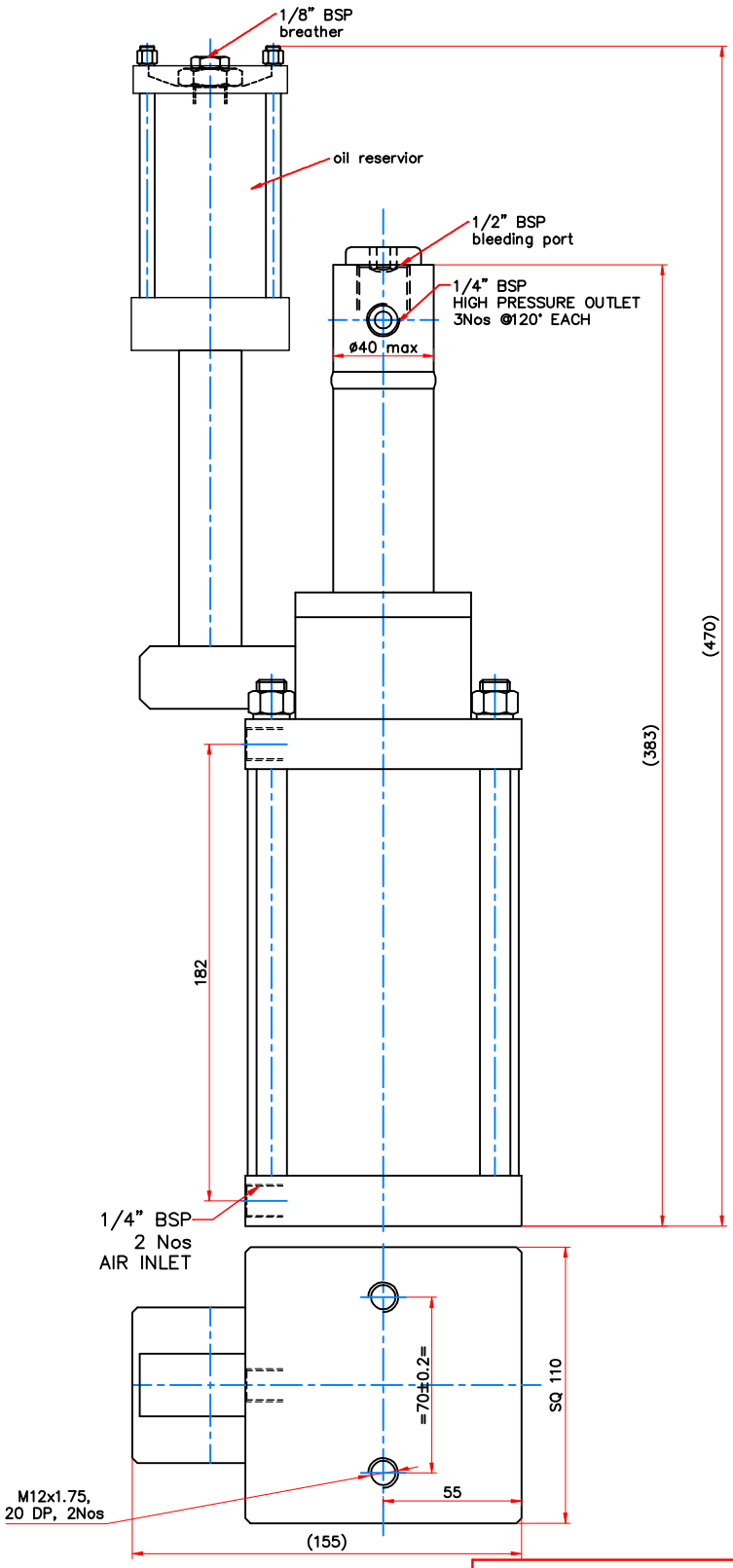

Surface Finish	Ra Value–μ	Roughness No.
∼	50	N12
▷	25	N11
	12.5	N10
▷▷	6.3	N9
	3.2	N8
	1.6	N7
▷▷▷	0.8	N6
	0.4	N5
	0.2	N4
▷▷▷▷	0.1	N3
	0.05	N2
	0.025	N1

All dimensions are in mm unless specified

TITLE	HYDRO–PNEUMATIC INTENSIFIER DOUBLE ACTING		
MODEL	6110–103		
INT. RATIO	1:32	PROJECTION 3rd ANGLE	
OIL OUTPUT	26cc		
		MOUNTING	AS PER DRAWING
		RATED PR.	7 kg/cm²
SCALE	NTS	TEST PR.	10 kg/cm²
DRN	RBP	11/01/16	
CHKD	RBP	11/01/16	
APPD	RBP	11/01/16	

Unspecified m/c deviations (med to IS 2102)

Linear–Length or Diameter

Over	Upto & inc.	TOL
–	6	±0.1
6	30	±0.2
30	120	±0.3
120	315	±0.5
315	1000	±0.8
1000	2000	±1.2

Length of shorter side of angle

Over	Upto & inc.	TOL
–	6	±1°
6	30	±30'
30	120	±20'
120	315	±10'

PRECISION ENGINEERING ACCESSORIES

PEENYA BANGALORE