DO NOT MEASURE DRAWING . IF IN DOUBT PLEASE ASK.

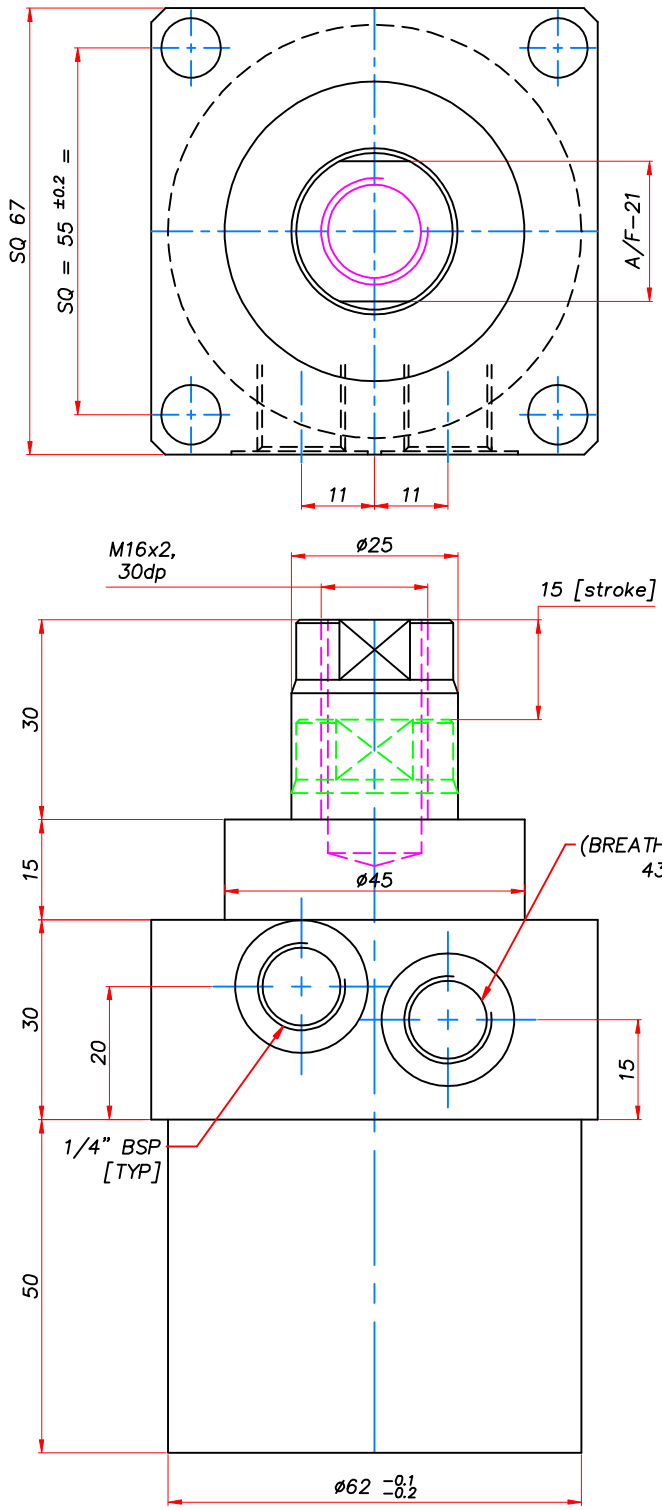

NOTE:

4311-511 – SINGLE ACTING

4311-521 – DOUBLE ACTING

All dimensions are in mm unless specified				
TITLE	HYDRAULIC PULL CYLINDER SINGLE &DOUBLE ACTING			
MODEL	4311-511/521			
BORE SIZE	ø50	PROJECTION 3rd ANGLE		
P.R SIZE	ø25			
STROKE	15	MOUNTING	TOP FLANGE	
		RATED PR.	160 kg/cm²	
SCALE	NTS	TEST PR.	240 kg/cm²	
DRN	RBP	15/12/15	BREAKAWAY PR.	3 kg/cm²
CHKD	RBP	15/12/15		
APPD	RBP	15/12/15		

Unspecified m/c deviations (med to IS 2102)

Linear-Length or Diameter

Over	Upto & inc.	TOL
–	6	±0.1
6	30	±0.2
30	120	±0.3
120	315	±0.5
315	1000	±0.8
1000	2000	±1.2

Length of shorter side of angle

Over	Upto & inc.	TOL
–	6	±1'
6	30	±30'
30	120	±20'
120	315	±10'

PRECISION ENGINEERING ACCESSORIES

PEENYA BANGALORE

Surface Finish	Ra Value-μ	Roughness No.
▽▽▽▽	0.025	N1
	0.05	N2
	0.1	N3
▽▽▽	0.2	N4
	0.4	N5
	0.8	N6
▽▽	1.6	N7
	3.2	N8
	6.3	N9
▽	12.5	N10
	25	N11
~	50	N12