DO NOT MEASURE DRAWING . IF IN DOUBT PLEASE ASK.

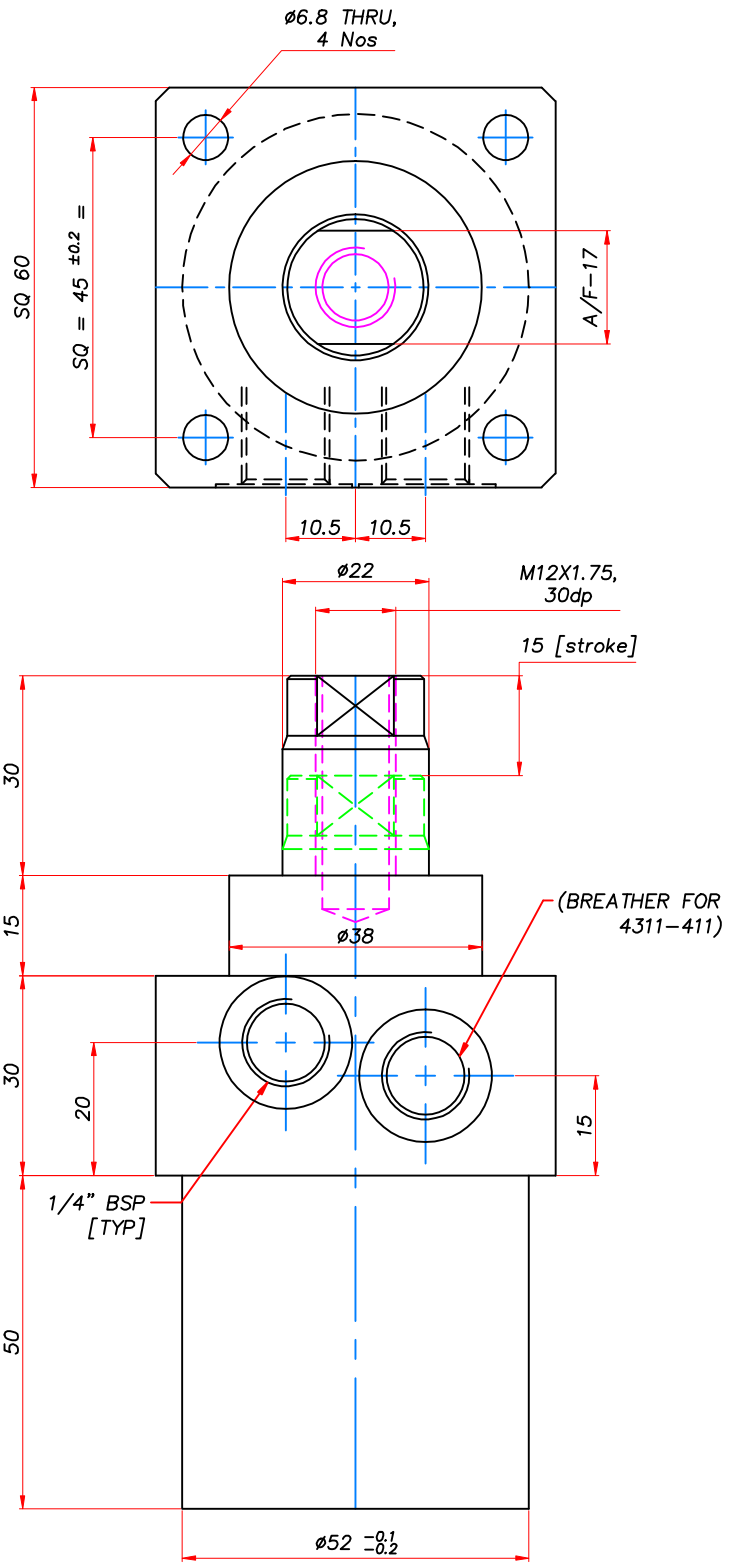

NOTE:

4311–411 – SINGLE ACTING

4311–421 – DOUBLE ACTING

All dimensions are in mm unless specified				
TITLE	HYDRAULIC PULL CYLINDER SINGLE &DOUBLE ACTING			
MODEL	4311–411/421			
BORE SIZE	ø40	PROJECTION 3rd ANGLE		
P.R SIZE	ø22			
STROKE	15	MOUNTING	TOP FLANGE	
		RATED PR.	160 kg/cm²	
SCALE	NTS	TEST PR.	240 kg/cm²	
DRN	RBP	15/12/15	BREAKAWAY PR.	3 kg/cm²
CHKD	RBP	15/12/15		
APPD	RBP	15/12/15		

Unspecified m/c deviations (med to IS 2102)

Linear–Length or Diameter

Over	Upto & inc.	TOL
–	6	±0.1
6	30	±0.2
30	120	±0.3
120	315	±0.5
315	1000	±0.8
1000	2000	±1.2

Length of shorter side of angle

Over	Upto & inc.	TOL
–	6	±1'
6	30	±30'
30	120	±20'
120	315	±10'

PRECISION ENGINEERING ACCESSORIES

PEENYA BANGALORE

Surface Finish	Ra Value–μ	Roughness No.
∼	50	N12
▽	25	N11
	12.5	N10
▽▽	6.3	N9
	3.2	N8
	1.6	N7
▽▽▽	0.8	N6
	0.4	N5
	0.2	N4
▽▽▽▽	0.1	N3
	0.05	N2
	0.025	N1